THE POSSIBILITIES ARE INFINITE FUJITSU

Optical Burst Switches

T. Yamamoto

FUJITSU LIMITED／FUJITSU LABORATORIES LTD.

Our work on 3-D–MEMS SW was partly supported by the National Institute of Information and Communications Technology (NICT) of Japan.

Flexible Photonic Networks

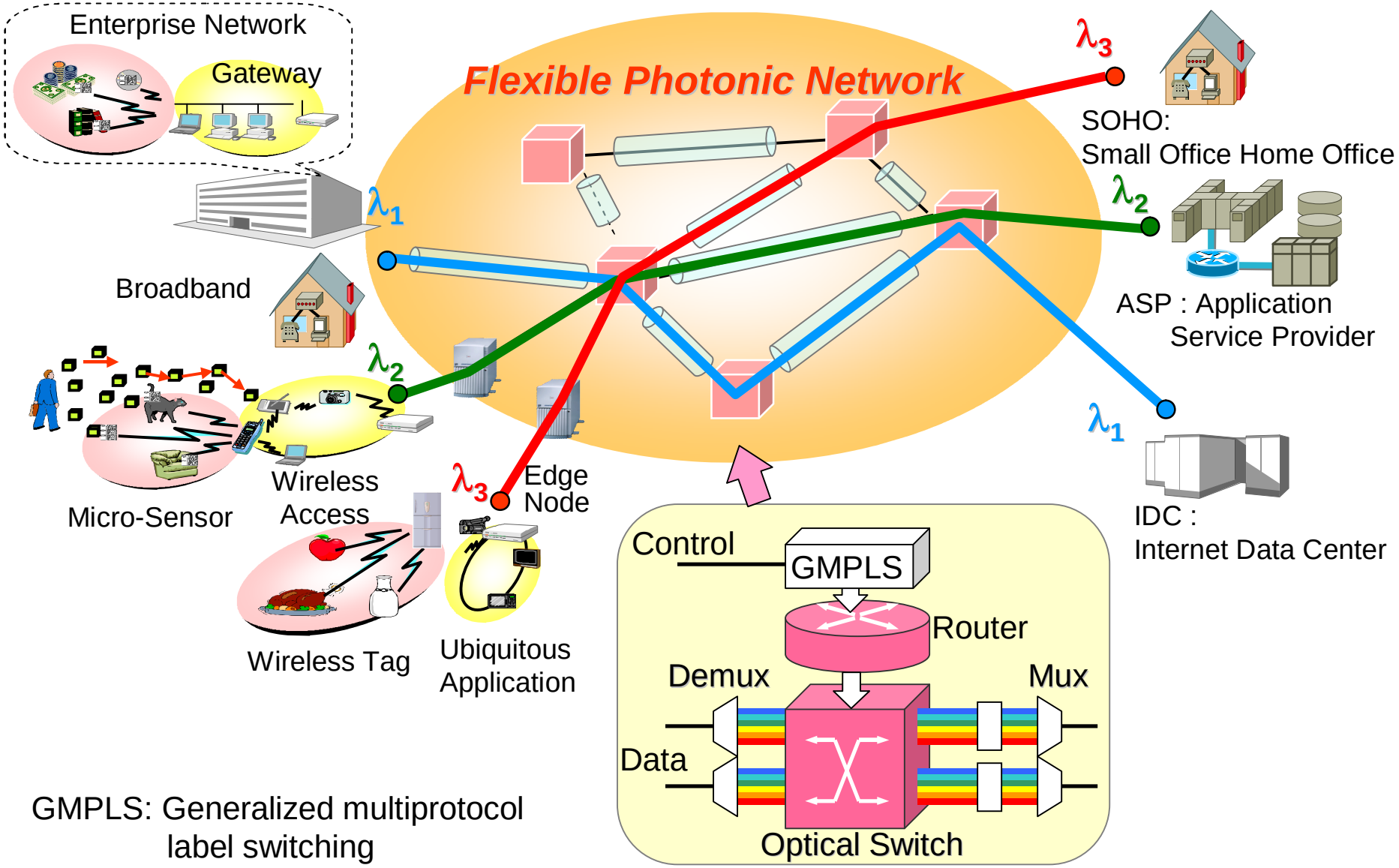

GMPLS: Generalized multiprotocol label switching

All Rights Reserved, Copyright FUJITSU LIMITED 2006

Photonic Network Evolution

FUJITSU

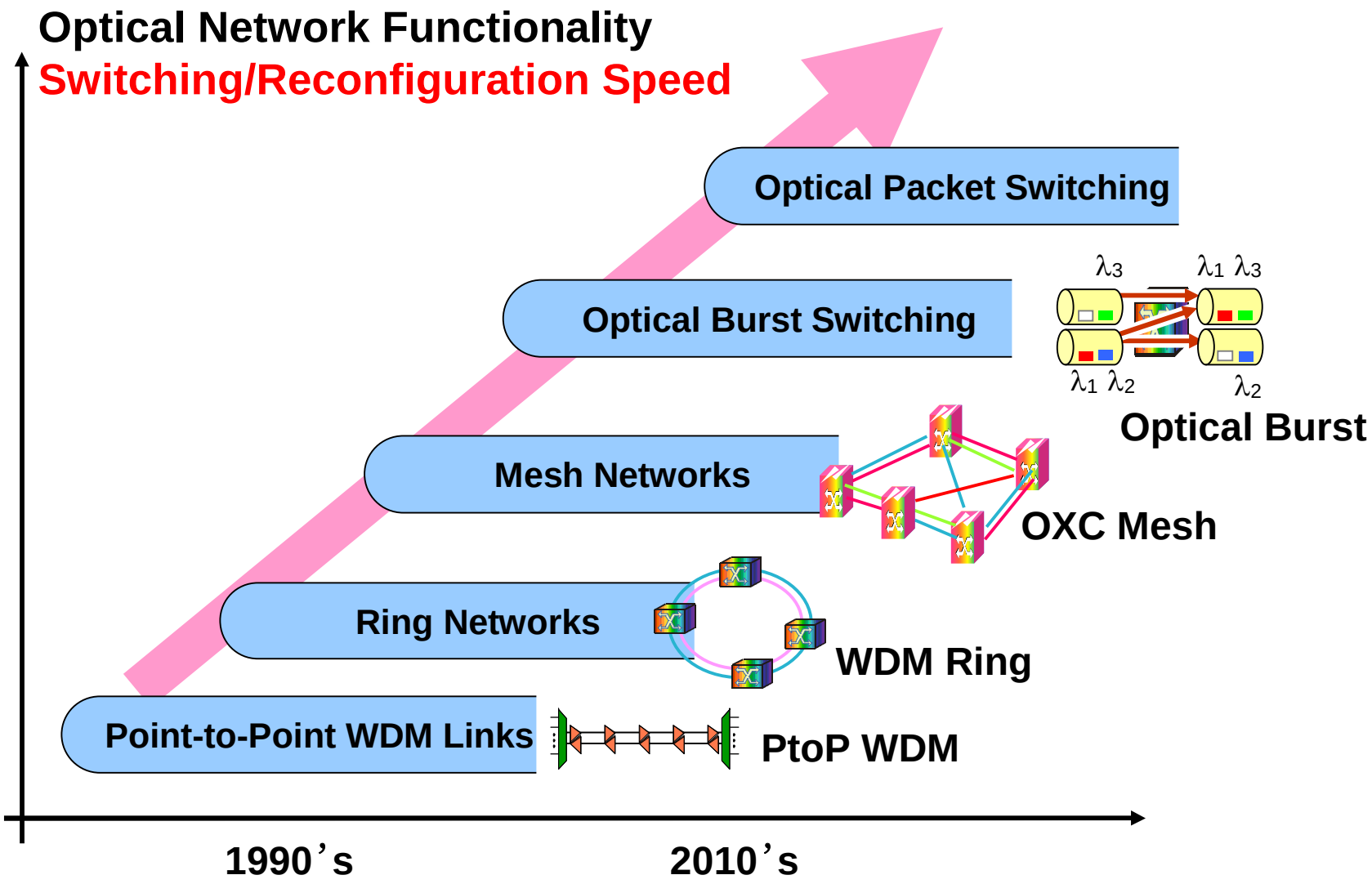

All Rights Reserved, Copyright FUJITSU LIMITED 2006

3-D-MEMS SW

- Large port count with a low insertion loss

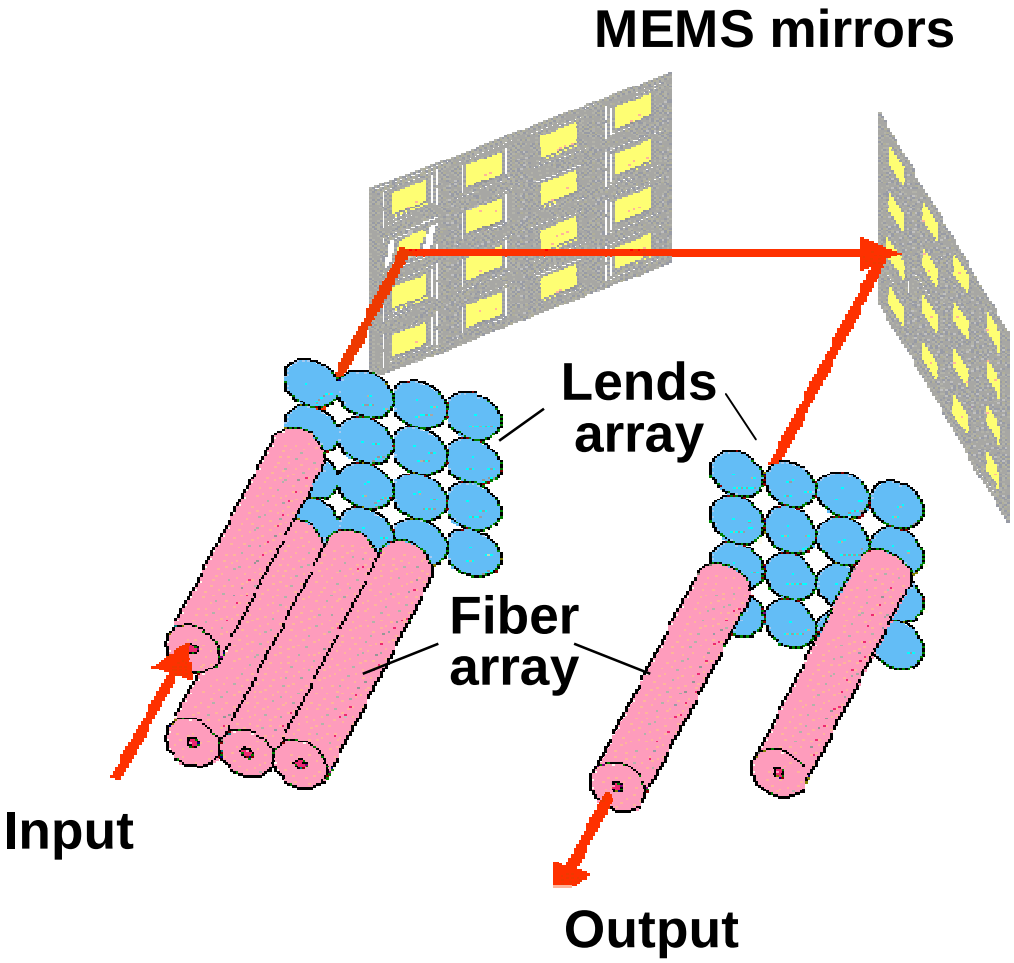

(MEMS: Micro Electro Mechanical Systems)

All Rights Reserved, Copyright FUJITSU LIMITED 2006

Comb-Driven MEMS Mirror

FUJITSU

- Features
  - Large Electro-Static Force
  - High-speed Switching
  - Easy Controllability

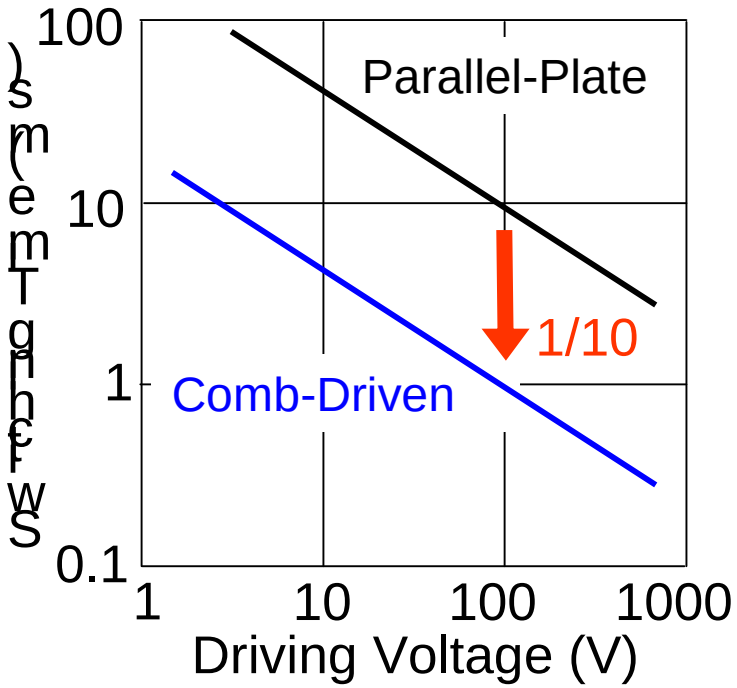

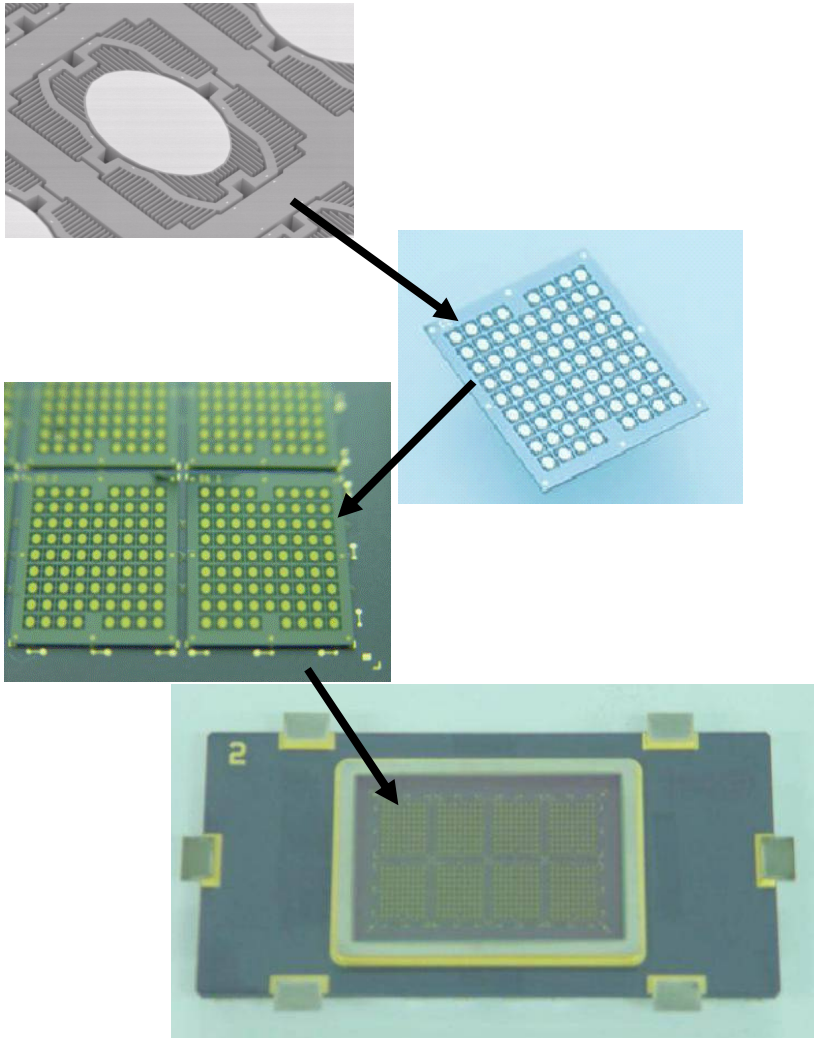

All Rights Reserved, Copyright FUJITSU LIMITED 2006

Compact Optical Switch Fabric

FUJITSU

- Folded Configuration with Roof-type Retro-reflector
  - Optical Stability
  - Low Insertion Loss (5 dB)

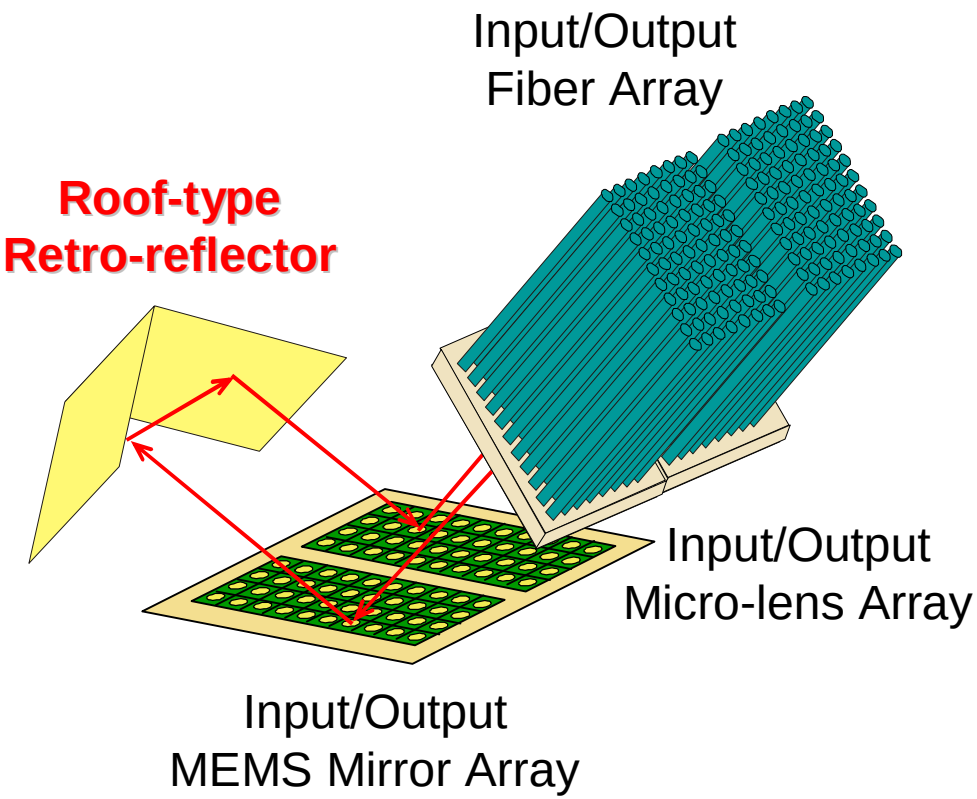

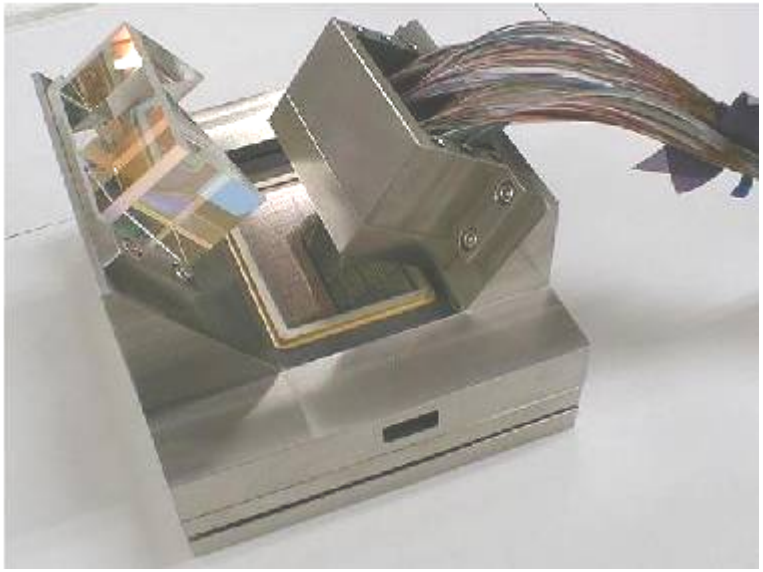

All Rights Reserved, Copyright FUJITSU LIMITED 2006

Effect of Roof-type Retro-reflector

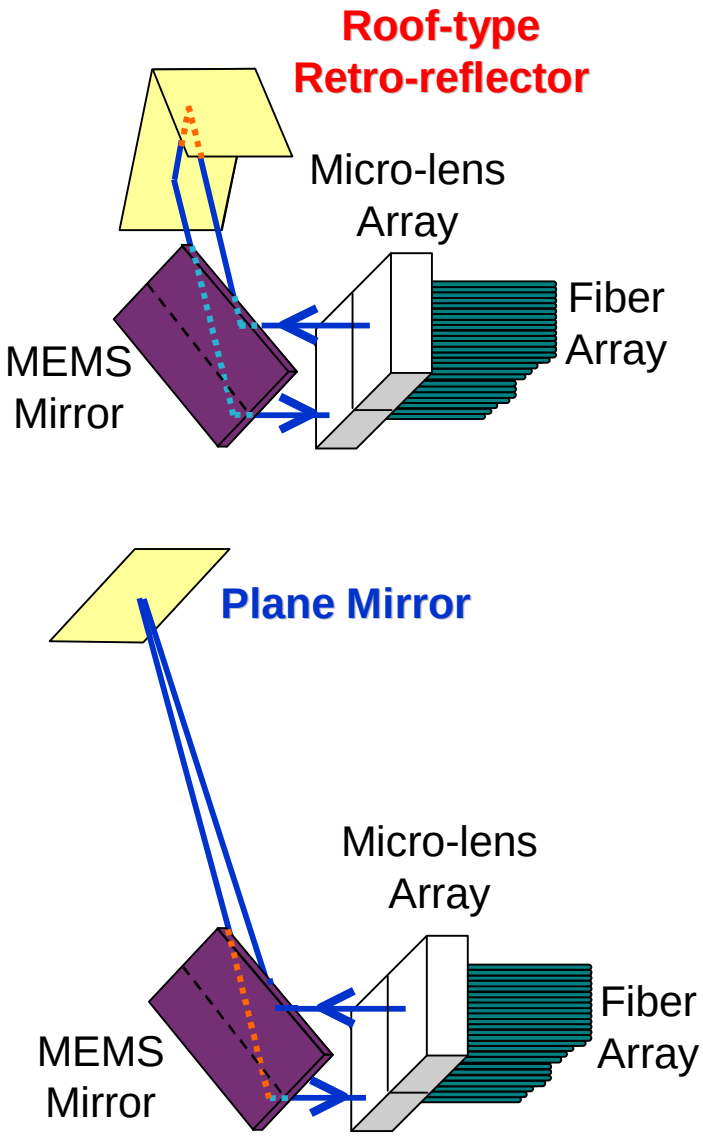

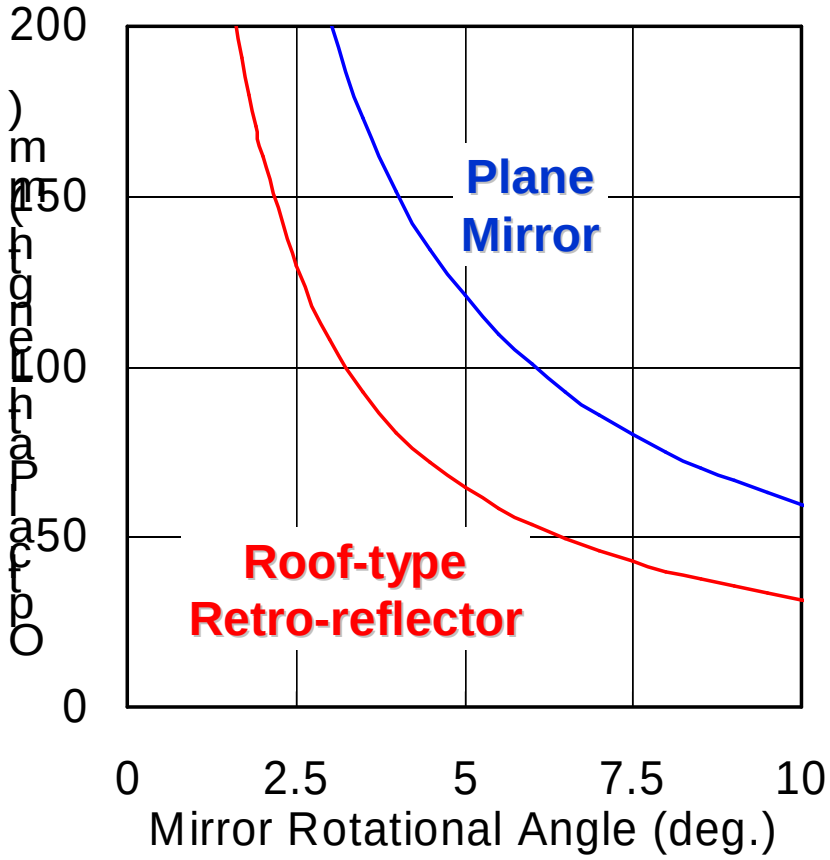

Optical Switch Size 1/2

All Rights Reserved, Copyright FUJITSU LIMITED 2006

256-Channel Optical SW module

- Features
  - Switching Time; 1 ms
  - Low Insertion Loss; 5 dB
  - Small Size;

    430 x 177 x 500 mm
  - Control IF; GSMP

All Rights Reserved, Copyright FUJITSU LIMITED 2006

Burst Switching Characteristics

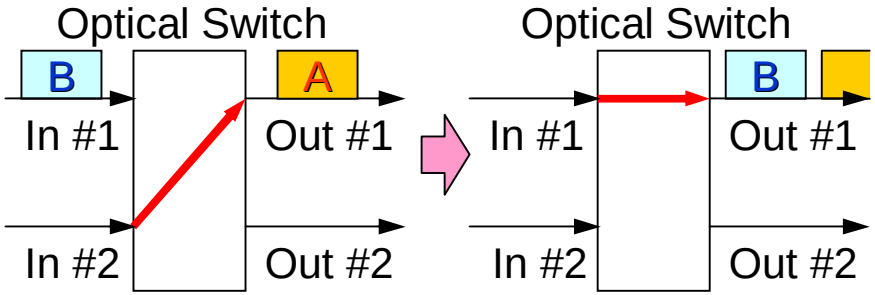

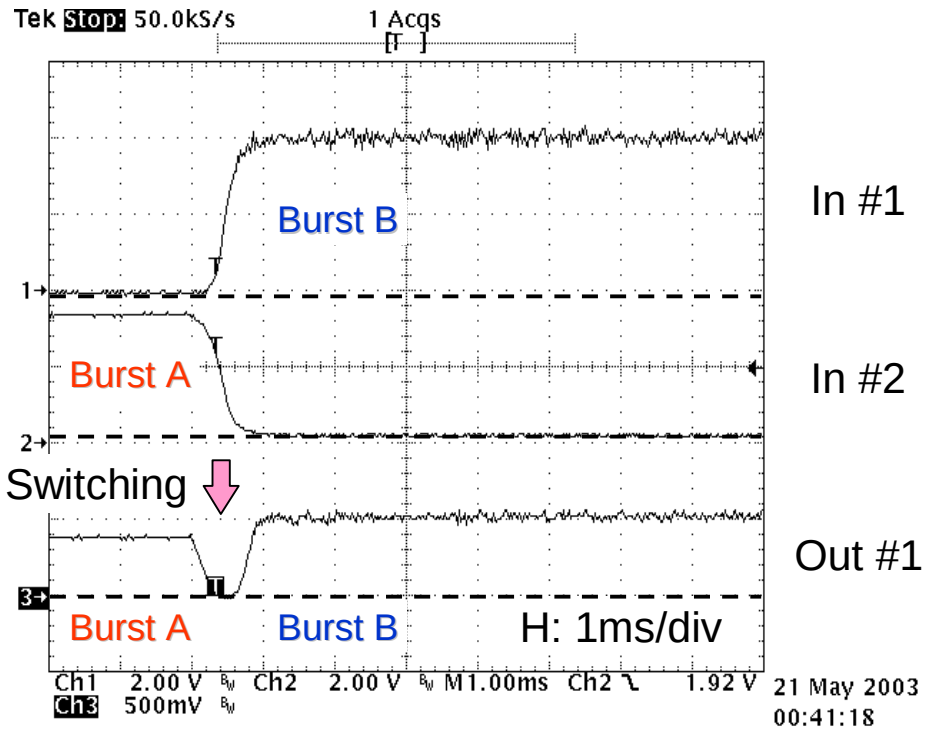

All Rights Reserved, Copyright FUJITSU LIMITED 2006

Required Switching Time of Optical SW

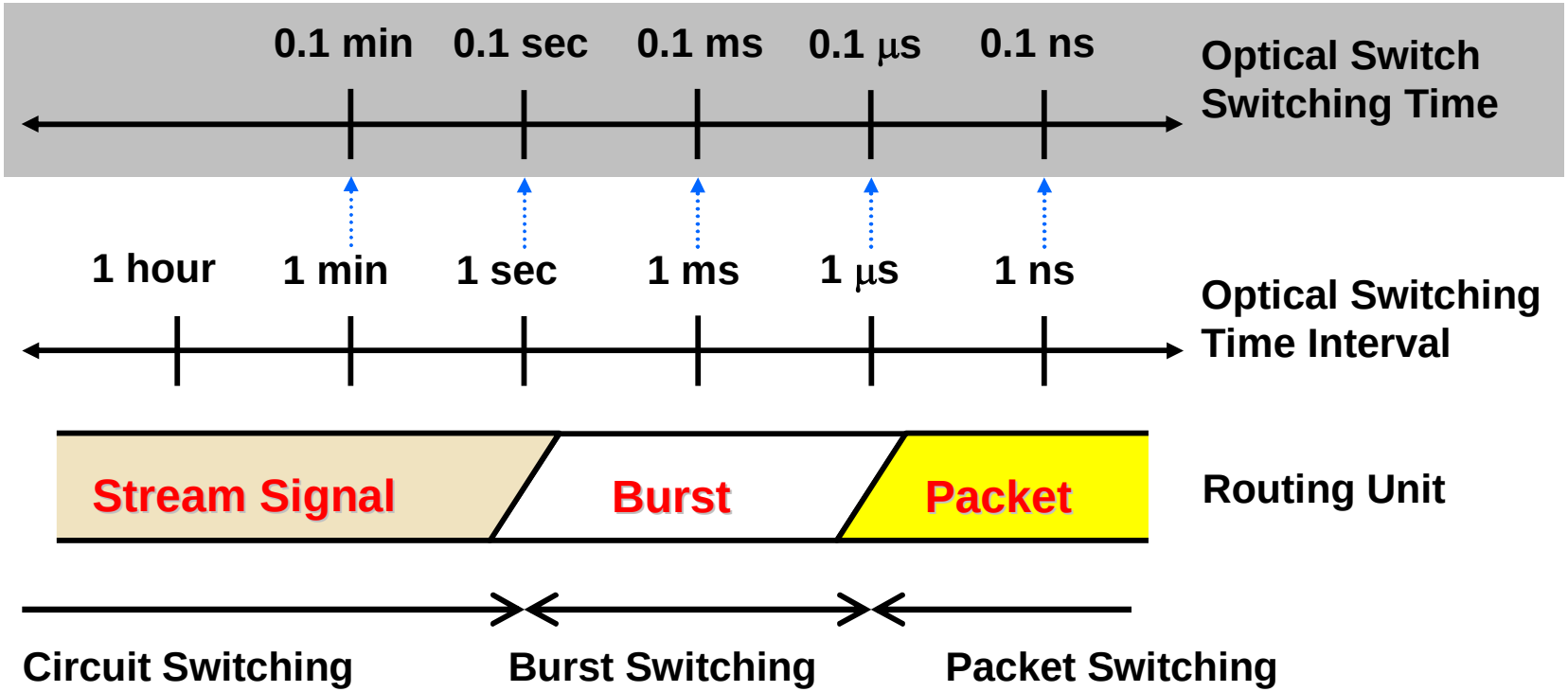

All Rights Reserved, Copyright FUJITSU LIMITED 2006

Characteristics of Optical SW

FUJITSU

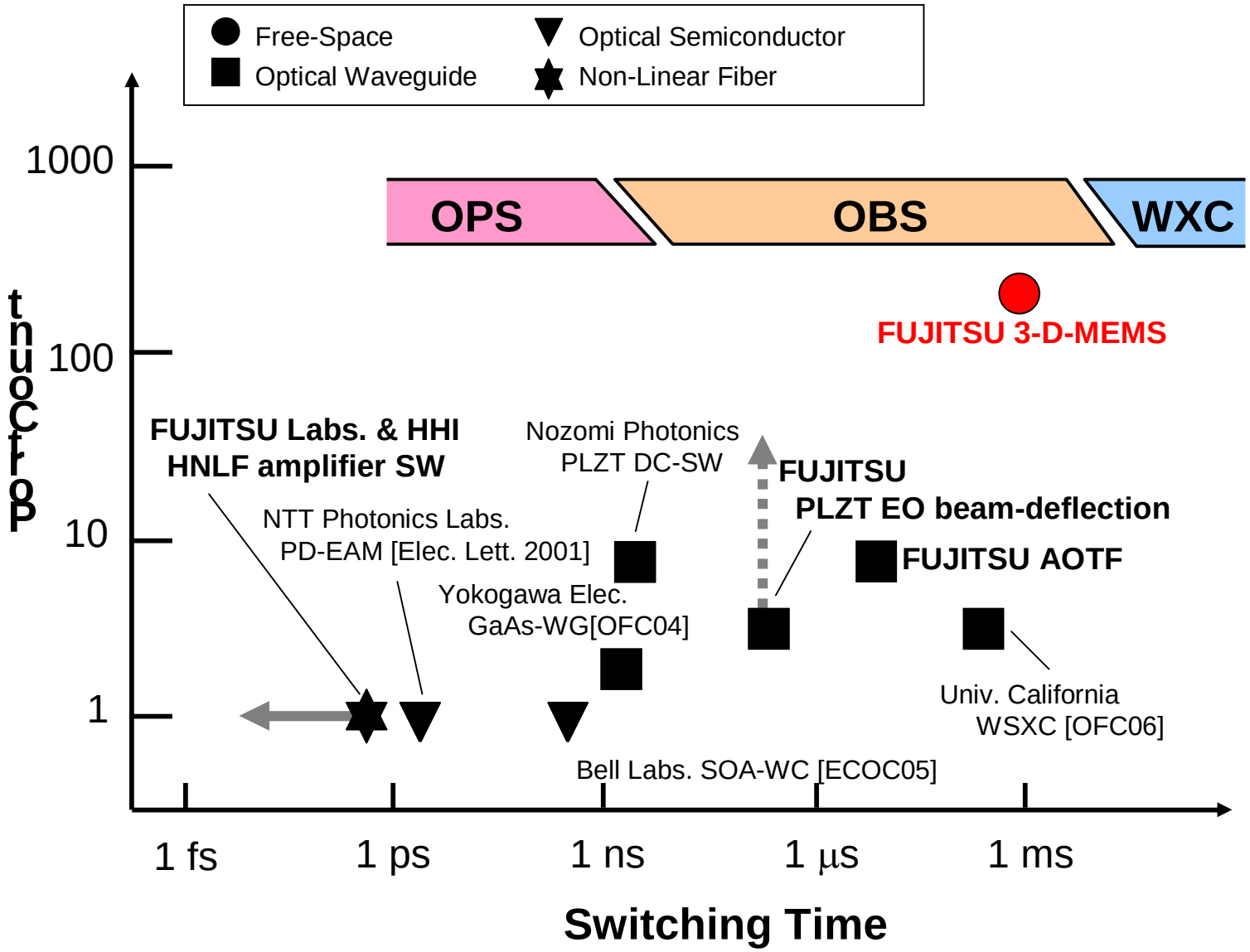

All Rights Reserved, Copyright FUJITSU LIMITED 2006